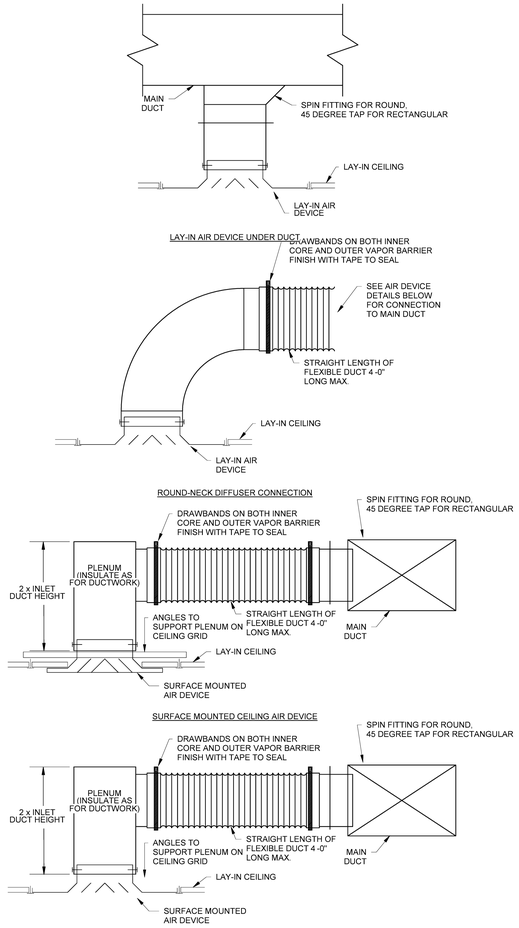

4 CEILING AIR DEVICE
NO SCALE

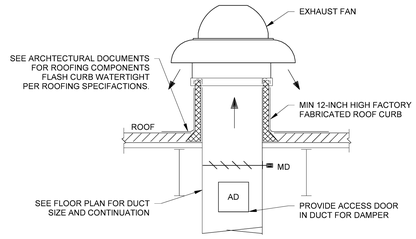

3 EXHAUST FAN FLAT ROOF
NO SCALE

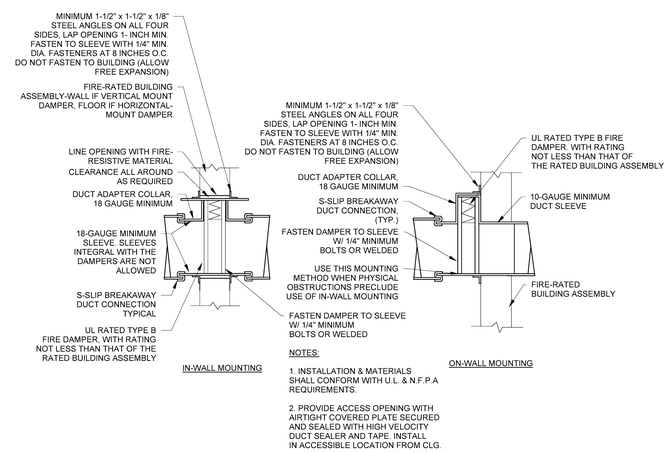

NOTES:

1. INSTALLATION & MATERIALS SHALL CONFORM WITH U.L. & N.F.P.A REQUIREMENTS.

2. PROVIDE ACCESS OPENING WITH AIRTIGHT COVERED PLATE SECURED AND SEALED WITH HIGH VELOCITY DUCT SEALER AND TAPE. INSTALL IN ACCESSIBLE LOCATION FROM CLG.

2 FIRE DAMPER IN AND ON WALL
NO SCALE

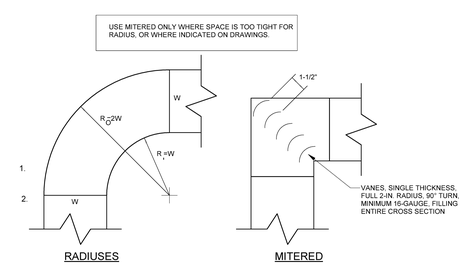

PRIOR TO INSTALLATION OF ANY ELBOWS, SUBMIT TO THE ENGINEER A SAMPLE OF EACH TYPE OF 90-DEGREE ELBOW, AT LEAST 12x12 DUCT SIZE, BUT MAY BE LARGER IF IT IS TO BE USED IN THE PROJECT. DELIVER TO THE ENGINEERS OFFICE. ALLOW AT LEAST 1 WEEK NOTICE FOR REVIEW. APPROVED SAMPLES MAY BE RETURNED TO THE CONTRACTOR FOR USE IN THE PROJECT - PROVIDE RETURN SHIPPING SERVICES AS REQUIRED

1 DUCT ELBOW
NO SCALE

HARRIMAN

AUBURN PORTLAND PORTSMOUTH BOSTON

CENTRAL MAINE COMMUNITY COLLEGE ECE AREA RENOVATION

AUBURN, MAINE

Harriman Project No.	16611

Key Plan Proj North

Issues and Revisions

Date	Description
03-29-17	CONSTRUCTION DOCUMENTS

STATE OF MAINE CLIFTON W. GREIM No. 6405 LICENSED PROFESSIONAL ENGINEER

PA / PE: CG

Drawn By: DBR

© 2017 Harriman Associates

DUCTWORK DETAILS

M30.1